Electrolux

Built-In All Refrigerator

EI32AR65J S

Shown with optional Single Louvered Trim Kit (TRIMKITSS1), using a 75" cutout installation.

Built-In Side-by-Side Configuration

Shown with companion, All-Freezer model EI32AF65JS and optional Double Louvered Trim Kit (TRIMKITSS2), using a 75" cutout installation.

Sure-2-Fit® Capacity

Our most usable space inside gives you plenty of space for everything from party platters and beverages to kids' snacks and juice boxes.

Perfect Organization System

Our organization system features Luxury-Glide® drawers with removable/adjustable dividers and two mini baskets, Perfect Bins™ Door Storage that tilts out for easy access and a condiment shelf, so you can keep food organized and easily at hand.

Luxury-Glide® Crisper Drawers

Drawers smoothly glide out and keep produce fresh with adjustable humidity control and minimal temperature variation.

Luxury-Design® LED Lighting

Our ramp-up designer LED lighting is as beautiful as it is functional, keeping the contents clearly visible.

19 CU. FT. BUILT-IN ALL REFRIGERATOR

Capacities	
Total Capacity	18.6 Cu. Ft.
Total Shelf Area	22.4 Sq. Ft.
Exterior	
Hidden Hinge Door Design	Yes
Signature Soft-Arc Handle Design	Yes
Features	
IQ-Touch™ Electronic Controls	Yes
Temp Alarm System/Door Ajar Alarm/Power Failure Alarm	Yes
PureAdvantage® Air Filtration	Yes
Adjustable Full-Width Glass Shelves (Silver Trim)	3
Luxury-Glide® Full-Extension Crispers/Fresh Zone™	1
Luxury-Glide® Full-Extension Deli Drawer/Cool Zone™	1
3-Position Adjustable Crisper Dividers	2
Removable Basket Trays	1
Adjustable Dairy Door Bin	1
Full-Width Gallon Storage with Tall Bottle Retainer	1
Clear Half-Width 1-Liter Adjustable Door Bins	3
Perfect Bins™ Door Storage	1
Full-Width Condiment Shelf	1
Luxury-Design® LED Lighting	Yes
Door Closer	Yes
Luxury-Quiet™ Design	Yes
Additional Features	
ENERGY STAR®	Yes
Sabbath Mode (Star-K® Certified)	Yes
Accessories	
Single Louvered Trim Kit – PN# TRIMKITSS1	Optional
Double Louvered Trim Kit – PN# TRIMKITSS2	Optional
PureAdvantage® Air Filter Replacement Cartridge – PN# 241754001	Optional
Specifications	
Product Dimensions –	
Height (Cabinet) (Including Door)	70-5/8" 71-3/8"
Width	32"
Depth (Including Door) (with 90° Door Open)	26-1/2" 57-1/4"
Power Supply Connection Location	Right Bottom Rear
Voltage Rating	120V/60 Hz/20A
Connected Load (kW Rating) @ 115 Volts‡	0.55
Minimum Circuit Required (Amps)	20
Shipping Weight (Approx.)	240 Lbs.

‡An electrical supply with grounded three-prong receptacle is required. The power supply circuit must be installed in accordance with current edition of National Electrical Code (NFPA 70) and local codes & ordinances.

NOTE: Always consult local and national electric and plumbing codes. Refer to Product Installation Guide for detailed installation instructions on the web at electroluxappliances.ca.

Specifications subject to change.

Optional Trim Kits

Single Louvered Trim Kit (TRIMKITSS1)

For single All-Freezer or All-Refrigerator installation. Includes louvered top grille and vented, louvered toe kick, 2-9/16" H leveling system and side/top trim pieces. (*Kit can be adapted to fit either 75" or 79" opening height.*[1])

Double Louvered Trim Kit (TRIMKITSS2)

For All-Freezer/All-Refrigerator side-by-side installation. Includes full-width, louvered top grille and vented, louvered toe kick, two 2-9/16" H leveling systems, side/top trim pieces and hardware to secure side-by-side units together. (*Kit can be adapted to fit either 75" or 79" opening height.*[1])

[1]For 79" cutout opening height, installation requires use of top louvered grille. For 75" cutout opening height, installation requires use of top trim piece and shortening of both side trim pieces.

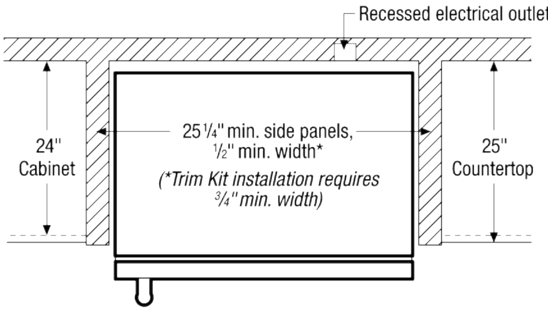

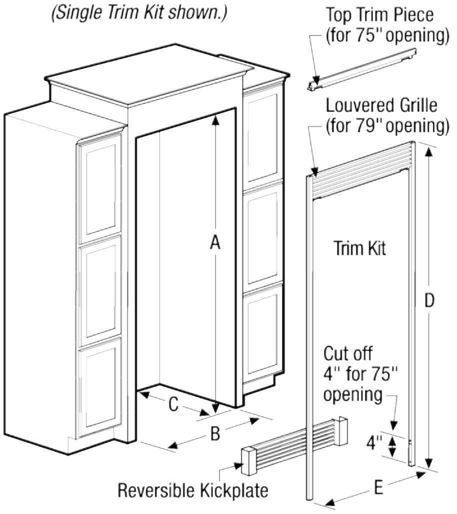

Optional Trim Kits & Dimensions

Kits include top and side trim pieces, louvered grille, reversible kickplate and leveling system to fit 75" or 79" opening height.

Single Louvered Trim Kit

PN# TRIMKITSS1

(D) 75 1/8" or 79 1/8" (E) 34 3/4"

Double Louvered Trim Kit

PN# TRIMKITSS2

(Includes hardware to secure side-by-side units together.)

(D) 75 1/8" or 79 1/8" (E) 67 1/8"

Note: Both kits attach directly to cabinetry through top trim piece or louvered grille to stabilize unit(s). Refer to detailed kit installation instructions packed with kit or on web.

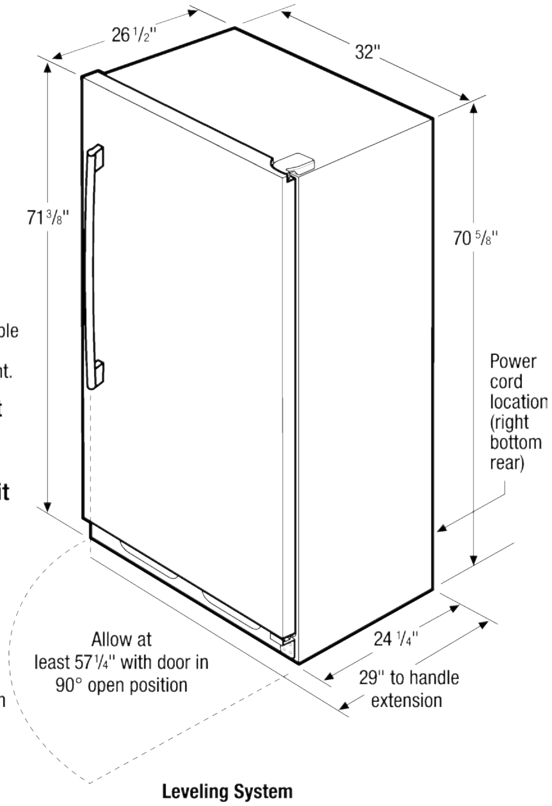

All-Refrigerator Cutout Dimensions

Built-In Installation *(without Trim Kit)*

Single Unit
(A) 72" (B) 33" (C) 25 1/4" min.*

Double Unit (Side-by-Side)
(A) 72" (B) 66" (C) 25 1/4" min.*

Built-In Installation *(with Trim Kit & Leveling System)*

Single Unit
(A) 75" or 79" (B) 33" (C) 25 1/4" min.*

Double Unit (Side-by-Side)
(A) 75" or 79" (B) 66" (C) 25 1/4" min.*

Leveling System

(2) per unit raises height 2-9/16" min.
Only available with trim kits.

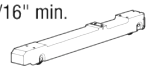

**Minimum depth from face of cabinet side panels and requires recessed electrical outlet.*

32" Built-In All-Refrigerator Specifications

- Product Weight – 230 Lbs.
- An electrical supply with grounded three-prong receptacle is required. The power supply circuit must be installed in accordance with current edition of *National Electrical Code (NFPA 70)* and local codes & ordinances.
- Voltage Rating – 120V/60 Hz/20 Amps
- Connected Load (kW Rating) @115 Volts = 0.55kW
- Amps @115 Volts = 5 Amps
- Always consult local and national electric codes.
- Minimum 25-1/4" depth requires recessed electrical outlet.
- To allow for ease of installation, tape excess power cord to back of unit.
- When installing refrigerator adjacent to wall, cabinet or other appliance that extends beyond front edge of unit, 20" minimum clearance recommended to allow for optimum 140° door swing, providing complete drawer/crisper access and removal. *(Absolute 4" minimum clearance will ONLY allow for 90° door swing which will provide limited drawer/crisper access with restricted removal.)*
- Refrigerator must be placed on level surface of hard material, same height as flooring. Surface must support approximately 800 lbs. when fully loaded. Unit equipped with 4-point leveling.

"Built-In Look" Specifications

- Minimum opening of 72"H x 33"W x 25-1/4"D required for single-unit "Built-In Look" installation; 66"W required for double-unit installation. (72"H to be measured from finished floor to underside of soffit or overhead cabinet.)
- Remove all wall/floor molding prior to built-in installation.

Optional Trim Kit Specifications

- If optional Single or Double Louvered Trim Kit is to be used, different cutout dimensions are required. Kit can be adapted to fit either 75" or 79" opening height. (*Refer to cutout dimensions on this page and detailed Louvered Trim Kit installation instructions included with kit or on web.*)
- Remove all wall/floor molding prior to built-in installation.

Note: For planning purposes only. Refer to Product Installation Guide on the web at electroluxappliances.ca for detailed instructions.

Optional Accessories

- Single Louvered Trim Kit – (PN# TRIMKITSS1).
- Double Louvered Trim Kit – (PN# TRIMKITSS2).
- PureAdvantage® Air Filter Replacement Cartridge – (PN# 241754001).

C US

Electrolux Major Appliances, N.A.

CANADA • 5855 Terry Fox Way • Mississauga, ON L5V 3E4 • 1-800-265-8352 • electroluxappliances.ca

High standards of quality at Electrolux Home Products, Inc. mean we are constantly working to improve our products. We reserve the right to change specifications or discontinue models without notice.

© 2010 Electrolux Home Products, Inc.

Printed in Canada